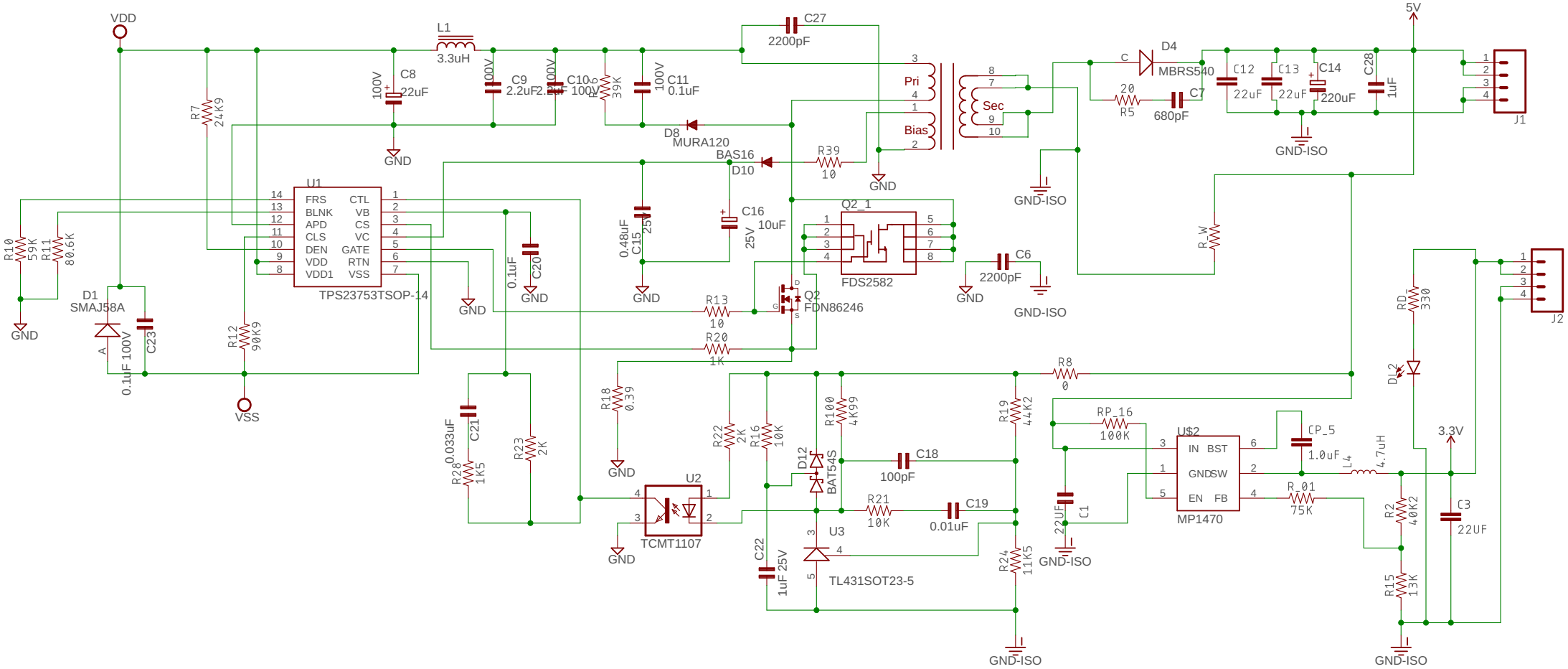

10.01.2021 12:59 f=0.90 C:\Users\maxx\Documents\EAGLE\projects\iot\iot-poe-board\schematic.sch (Sheet: 1/2)